TECHNICAL DRAWINGS

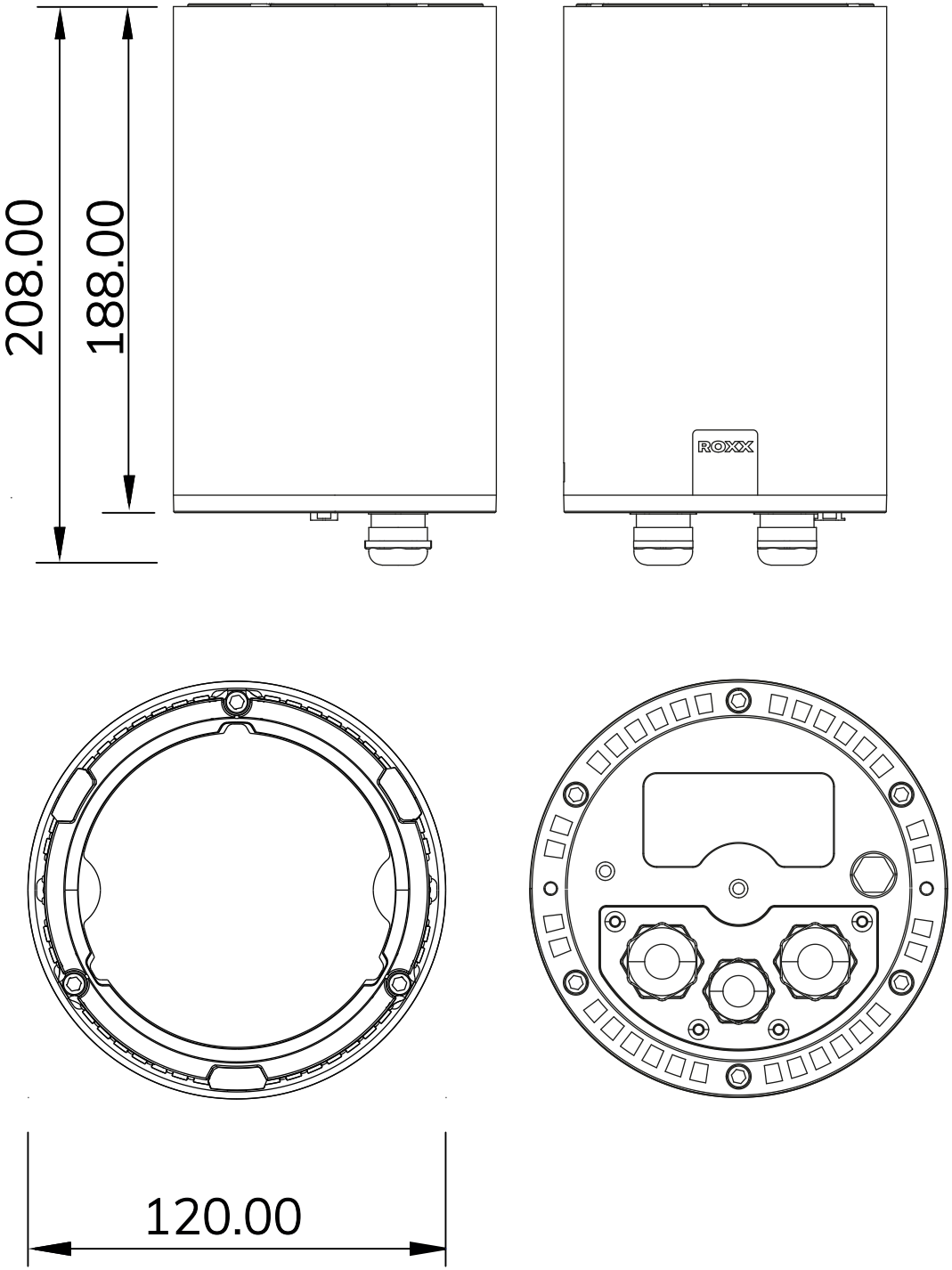

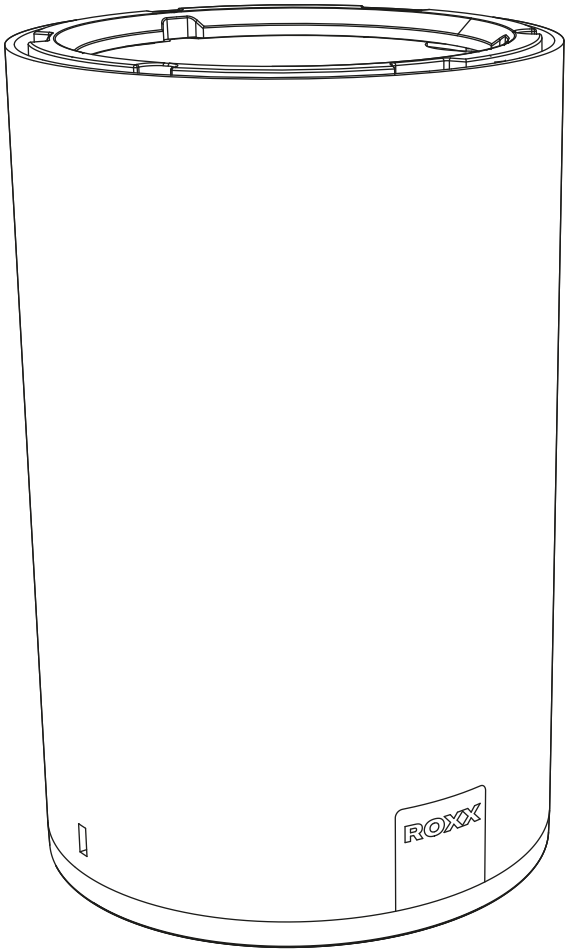

ROXX®

A.FLEX

ROXX GmbH
Hansestr. 91, 51149 Köln, Germany
www.roxxlight.com