TECHNICAL DRAWINGS

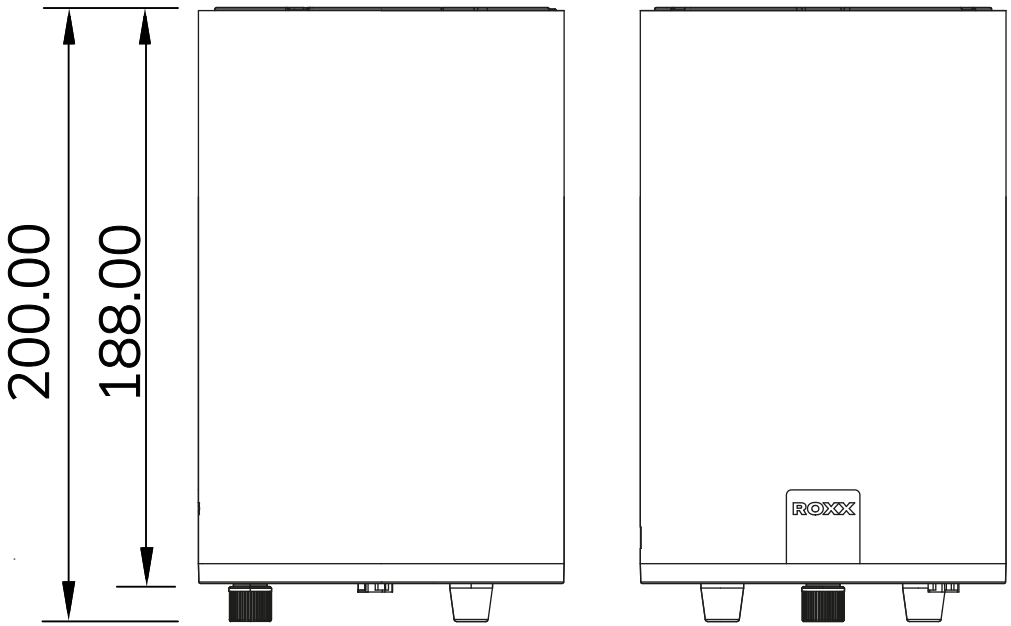

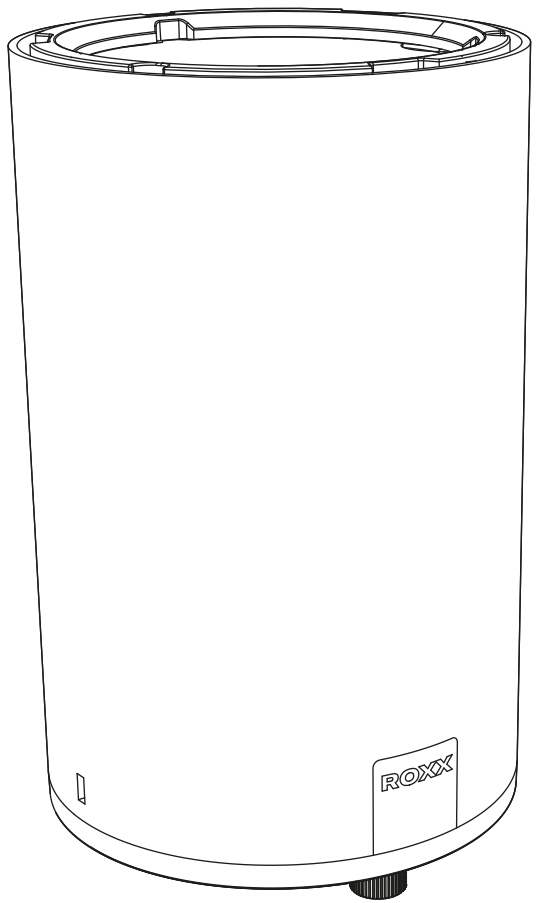

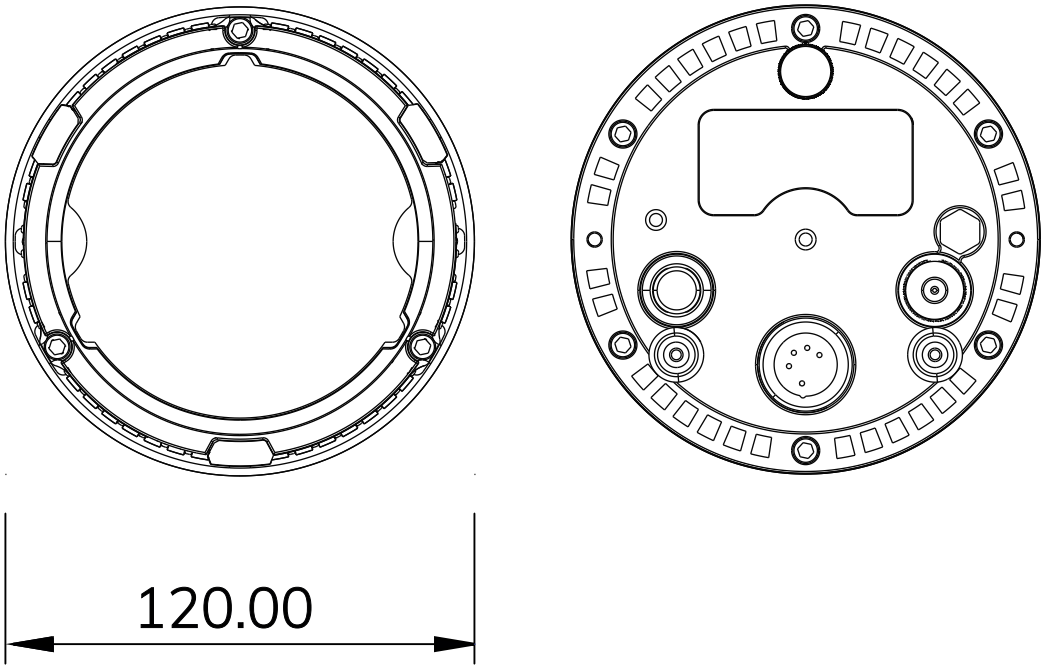

ROXX®

B.FLEX

ROXX GmbH
Hansestr. 91, 51149 Köln, Germany
www.roxxlight.com